RATING

TURBINE AND EXTRACTION ARRANGEMENT IS SCHEMATIC ONLY

CALCULATED DATA - NOT GUARANTEED

THIS HEAT BALANCE REPRESENTS THE MAXIMUM EXPECT FLOW AT THE INITIAL CONDITION SHOWN.
TO ASSURE THAT THE TURBINE WILL PAST THIS FLOW, CONSIDERING VARIATIONS IN FLOW COEFFICIENTS FROM EXPECTED VALUES, MANUFACTURING TOLERANCE, ETC WHICH MAY AFFECT THE FLOW
A TURBINE INLET PRESSURE AS MUCH AS 5 PERCENT GREATED THAN THAT SHOWN MAY BE REQUIRED
THE VALUE OF GENERATOR OUTPUT SHOWN ON THIS HEAT BALANCE IS AFTER ALL POWER FOR EXCITATION AND OTHER TURBINE-GENERATOR AUXILIARIES HAS BEEN DEDUCTED

PROGRAM NO 8.260

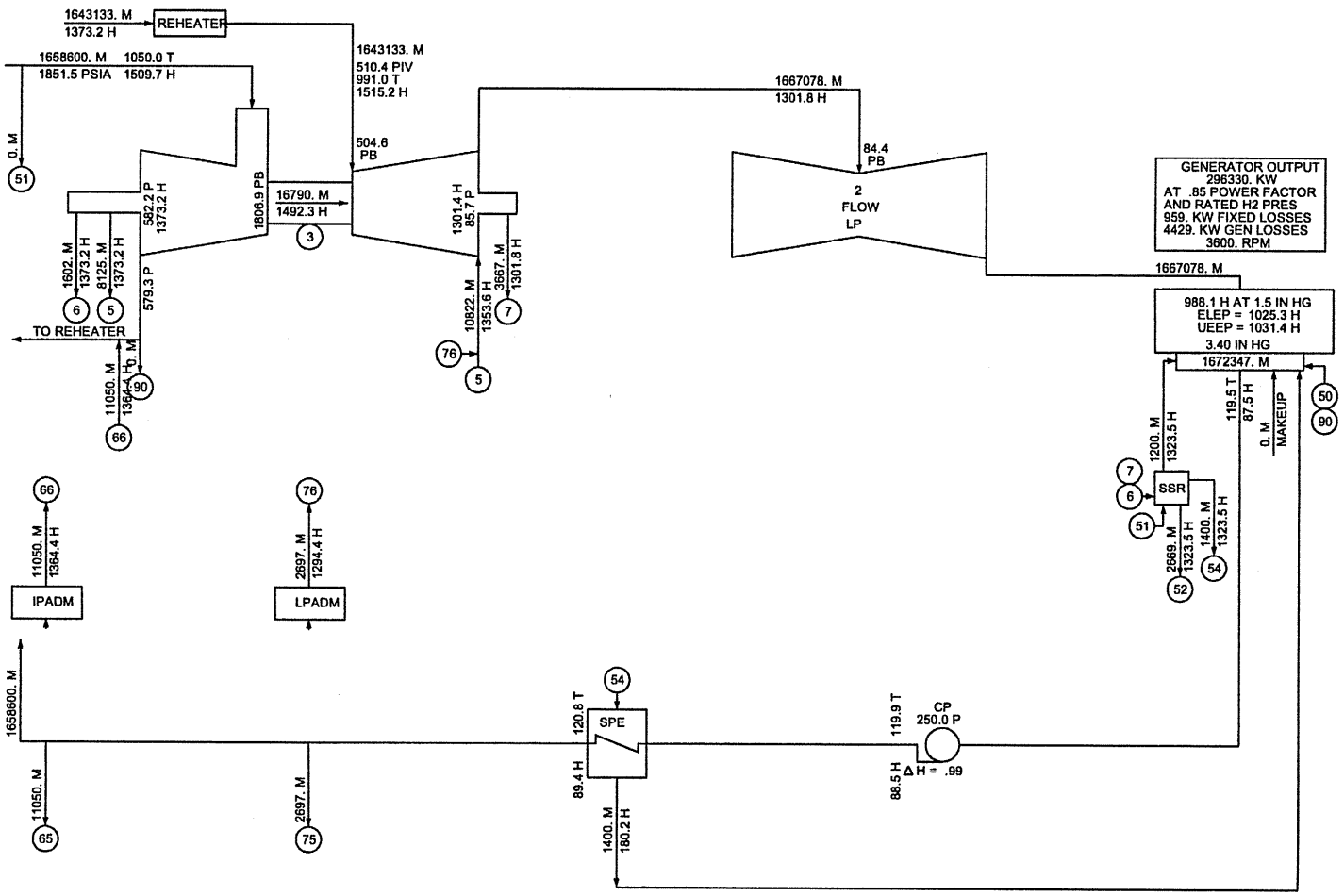

$$\text{VALVE BEST POINT NET HEAT RATE} = \frac{1658600.\,(1509.7 - 89.4) + 1643133.\,(1515.2 - 1373.2) + 2697.\,(1294.4 - 89.4) + 11050.\,(1364.4 - 89.4)}{296330.} = 8796 \ \frac{\text{BTU}}{\text{KW-HR}}$$

LEGEND - CALCULATIONS BASED ON 1967 ASME STEAM TABLES
M - FLOW-LB/HR
P - PRESSURE-PSIA
H - ENTHALPY-BTU/LB
T - TEMPERATURE-F DEGREES

296330. KW 3.40 IN HG ABS 0. PCT MU
TC2F 33.5 IN LSB 3600 RPM
1851.5 PSIA 1050. / 991. T
GEN- .85 PF LIQ